HANSA · TMP srl

HYDRAULIC COMPONENTS
HYDROSTATIC TRANSMISSIONS
GEARBOXES - ACCESSORIES

Certified Company ISO 9001 - 14001

Via M. L. King, 6 - 41122 MODENA (ITALY)
Tel: +39 059 415 711
Fax: +39 059 415 729 / 059 415 730
INTERNET: http://www.hansatmp.it
E-MAIL: hansatmp@hansatmp.it

HT 16 / M / 3503 / 1016 / E

Продукция собственного производства HANSA-TMP

Нерегулируемый аксиально-поршневой насос открытого контура для работы при повышенных нагрузках

TPF 60
(36,16 ÷ 49,94 cm³/rev.)

CONTENTS

Hydraulic Pumps Type TPF 60

Heavy Duty Axial Piston Pumps Fixed Displacement for open loop circuit

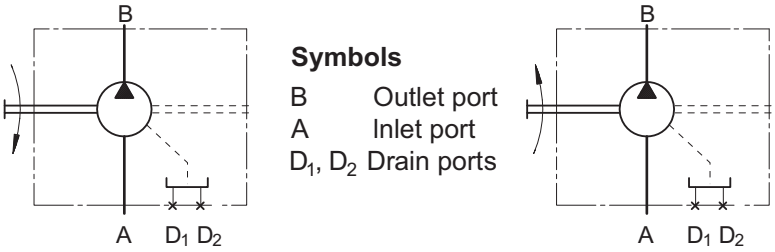

Symbols

B Outlet port
A Inlet port
D_1, D_2 Drain ports

open drain line is always required

APPLICATION

- Open loop circuit
- Agricultural machines
- Road building machines
- Mining machinery
- Food industry machines
- Special vehicles

OPTIONS

- Swash plate
- Port options
- Shaft options
- High pressure ports

ADVANTAGES

- Low noise
- Low pulsation
- Long service life
- High power density

GENERAL

Displacement,	cm^3/rev	**36,16÷49.94**
Max. Driving Speed,	RPM	**2800**
Max. Driving Torque,	Nm	**278**
Max. Output,	kW	**54**
Max. Pressure Drop,	bar	**350**
Max. Oil Flow,	lpm	**132**
Min. Driving Speed,	RPM	**500**
Fluid		**Mineral based- HLP (DIN 51524) or HM (ISO 6743/4)**
Temperature Range,	°C	**-40÷82**
Optimal Viscosity Range,	mm^2/s	**12÷68**
Filtration		**ISO code 18/16/13 (Min. recommended fluid filtration of 10 micron)**

Max. Pressure

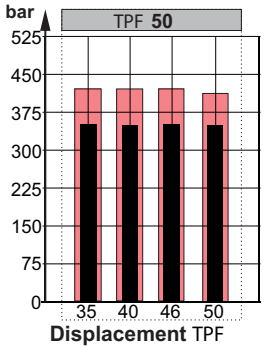

Max. Oil Flow

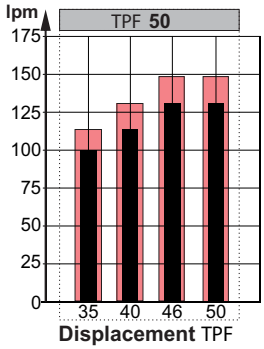

Max. Output

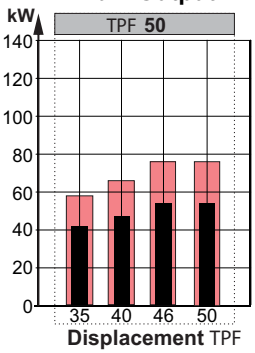

Intermittent values Continuous values

Port, Shaft and Flange Types

Cross Table - Flange Types

TPF 60	Type of flanges
x	**B** - 2-Bolt, SAE B, SD. 101.6, BC. 146, BD. 14.3

Legend

BC (Bolt Circle) - Center point of bolt holes
BD (Bolt Diameter) - Diameter of bolt holes
SD (Spigot Diameter) - Center Diameter

Cross Table - Shaft Types

TPF60	Type of shafts
x	**SD** ø21.72 **Spline** SAE 13T 16/32 DP, M8-6H thread
x	**SF** ø24.9 **Spline** SAE 15T 16/32, M8-6H thread
x	**CK** ø22.2 **Straight**, M8-6H thread, parallel key 1/4"x1/4"x1" BS46
x	**MK** ø22.2 **Straight**, M8-6H thread, parallel key 1/4"x1/4"x1 1/2" BS46
x	**CM** ø25.4 **Straight**, M8-6H thread, parallel key 1/4"x1/4"x1" BS46
x	**CS** ø32 **Straight**, M8-6H thread, parallel key A10x8x45 DIN6885

Cross Table - Port Types

PORTS SIZE - THREAD OPTION	
TPF 60	**Type of threads**
default	Inlet ISO 6162-1 DN38,Outlet ISO 6162-2 DN19, drain ports M18x1.5

PUMP DIMENSIONS

The bellow dimensions are for **comparison only**. The pumps can obtain different shafts and end covers.

TPF **50**

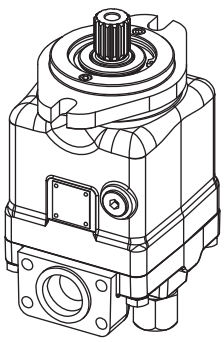

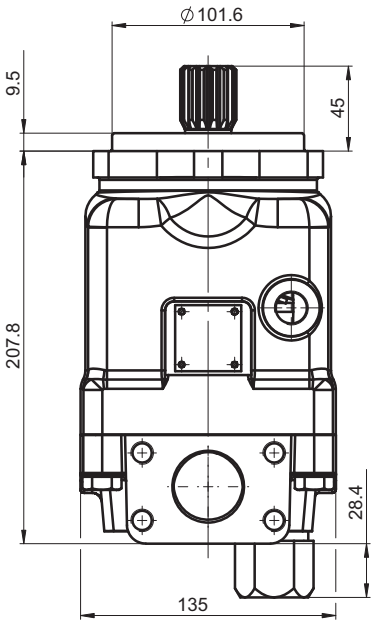

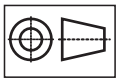

mm

SECTION VIEW

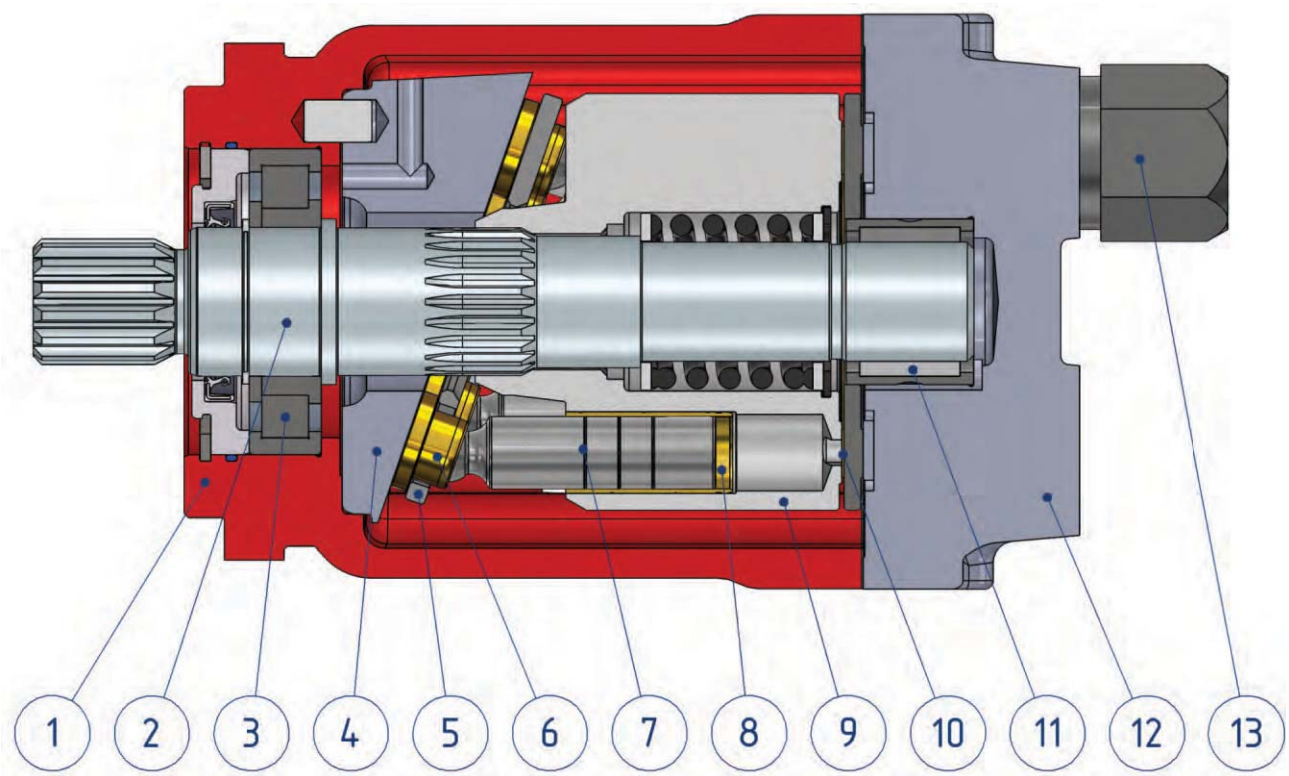

1. Cast iron body
2. Hardened shaft
3. Robust radial - axial roller bearing
4. Solid swash plate
5. Retainer plate
6. Improved piston shoes
7. Improved pistons
8. Brass bushings
9. Hardened steel cylinder block
10. Bimetal distributor
11. Needle bearing
12. Solid end cover
13. Part of hydraulic system helps reduces pump noise and vibration

The heavy duty design of TPF pumps gains big advantage over the typical swash plate pumps.
One of then is a special hydraulic system, which reduces noise and vibration created from pump.
Another big advantage of our design, which in general is typical for swash plate pumps, is that the pulsations during the operation are much less. In general the swash plate pumps are more reliable than the bent axis pumps and gear pumps.

SPECIFICATION DATA

Type		TPF 35	TPF 40	TPF 46	TPF 50
Displacement, cm.^{3}/rev.		36.16	41.59	47.13	49.94
Max. Driving Speed, RPM	Cont.	2800	2800	2800	2500
	Int.*	3150	3150	3150	2800
Max. Driving Torque,*** Nm	Cont.	202	232	263	278
	Int.**	242	278	315	326
Output, kW	Cont.	41	47	54	54
	Int.**	58	67	77	77
Max. Pressure, bar	Cont.	350	350	350	350
	Int.**	420	420	420	410
Max. Oil Flow, lpm	Cont.	100	116	132	132
	Int.*	114	131	148	148
Permissible Shaft Load max Axial**** N		Fa=2000			
max Radial**** N		Fr=3600			
Min. Speed, RPM		500			
Max. Pressure in Drain Line, bar		5 open drain line is always required			
Weight, kg		20,5			

* Intermittent speed (flow): for pressure up to 150 bar;
** Intermittent load: the permissible values may occur for max. 10% of every minute;
*** Theoretical torque;
**** The calculated max values are based on the optimal direction of the forces Fr, Fa and optimal position of the shaft.

1. The recommended output power for continuous operations should not be exceeded.
2. Recommended filtration as per ISO 4406 cleanliness code 18/16/13 or better. This filtration corresponds to SAE AS 4059 8A/7B/7C. Nominal filtration - 10 micron or better.
3. Recommended a premium quality, anti-wear type mineral based hydraulic oil, HLP (DIN 51524) or HM (ISO6743/4).
4. Recommended oil viscosity - 12...68 cSt or see page 18.
5. Recommended maximum system operating temperature -82°C.
6. To ensure optimum life of the pump, fill it up with fluid prior to load it and run with moderate load and speed for about 10-15 minutes.

FUNCTION DIAGRAMS

Sound pressure level (noise) is measured in acoustic chamber according to DIN 45635 Part 1 and Part 26. These diagram is applied for all displacements.

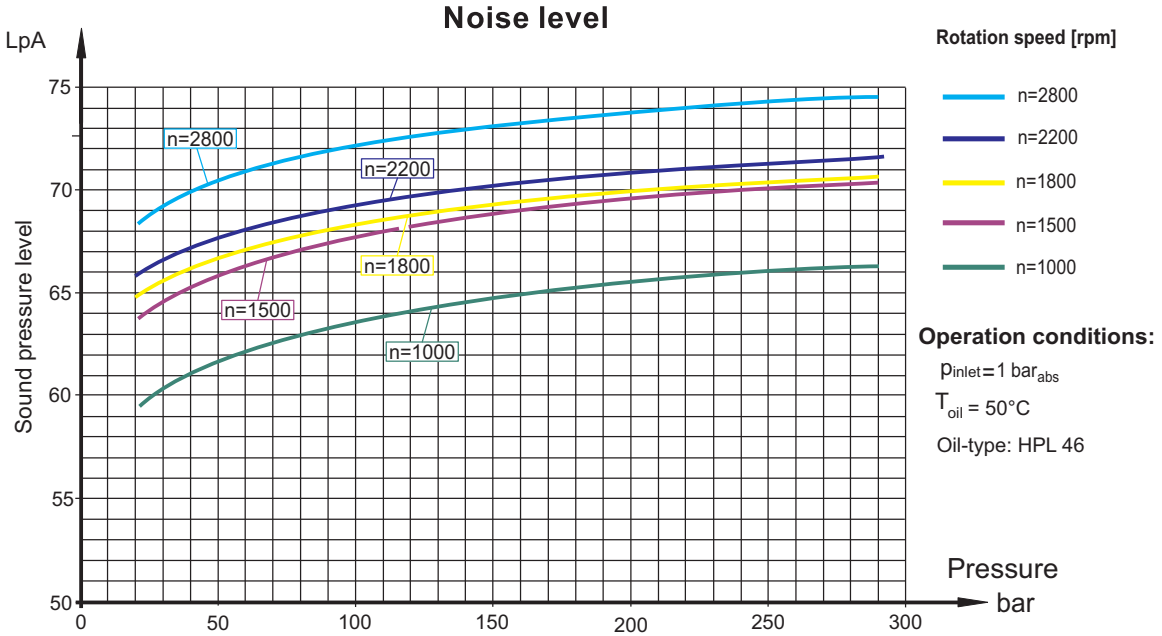

The sound pressure level for a particular pump may vary ±2 dB(A) compared to what is shown in the diagram.

The below efficiencies are applied for all displacements.

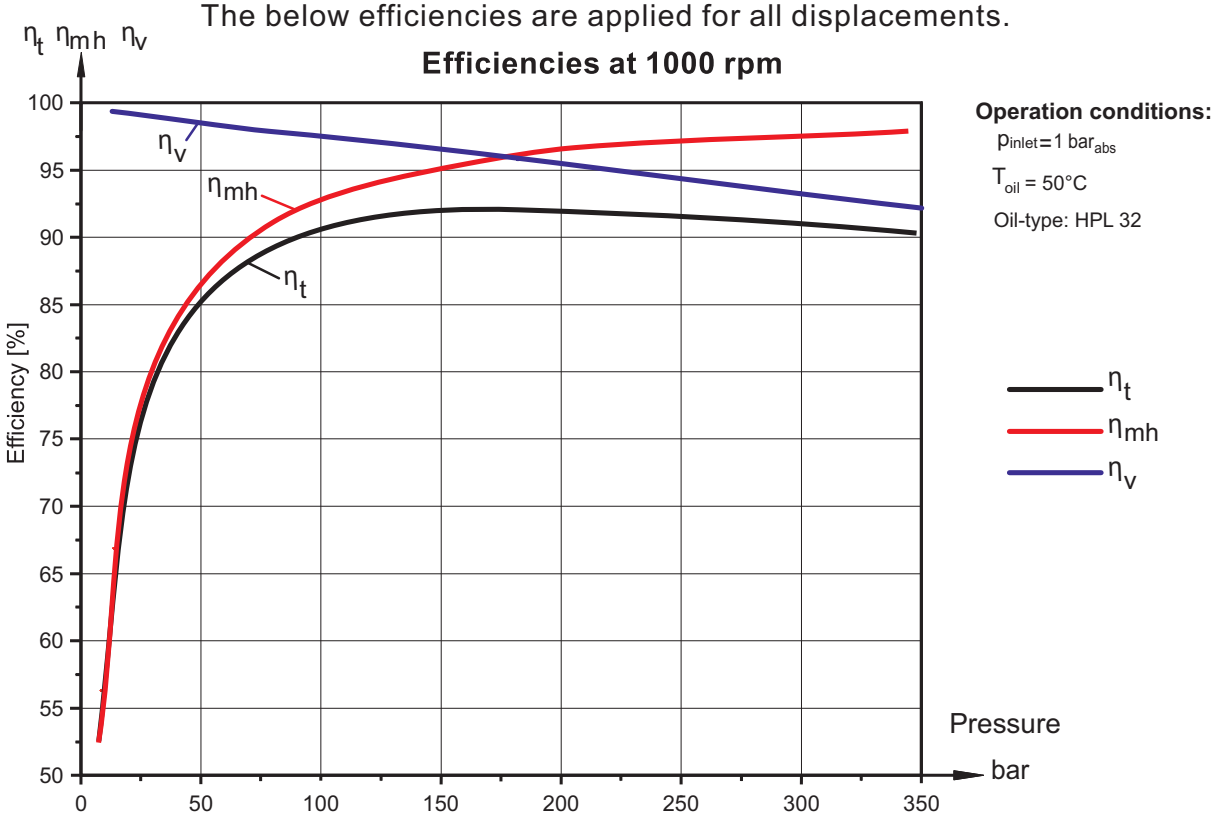

The pump size, pressure, torque, speed of rotation and flow rate required for a specific application can be calculated using the formulas on page 19.

Efficiencies for a particular pump may vary from the shown in the diagram depending on the operating conditions.

FUNCTION DIAGRAMS

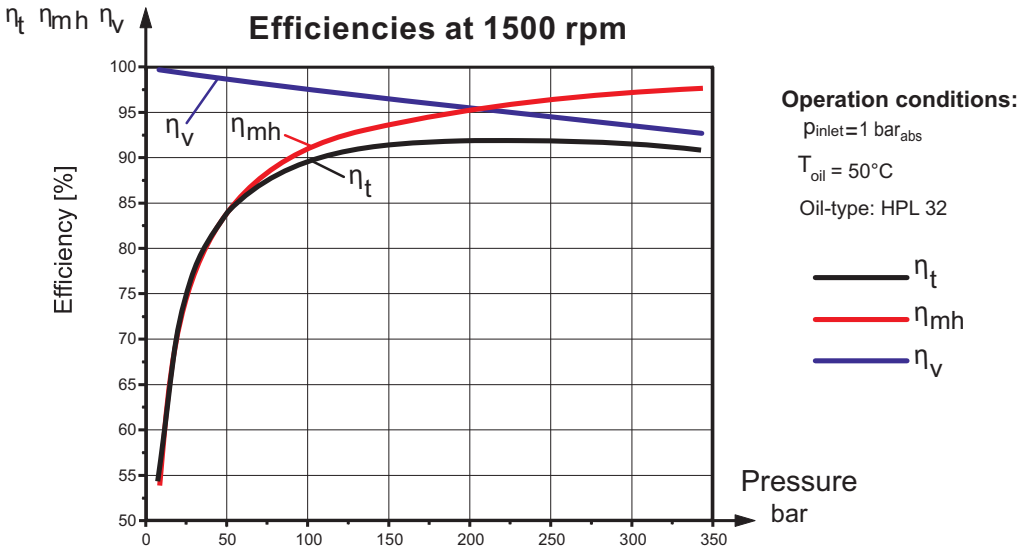

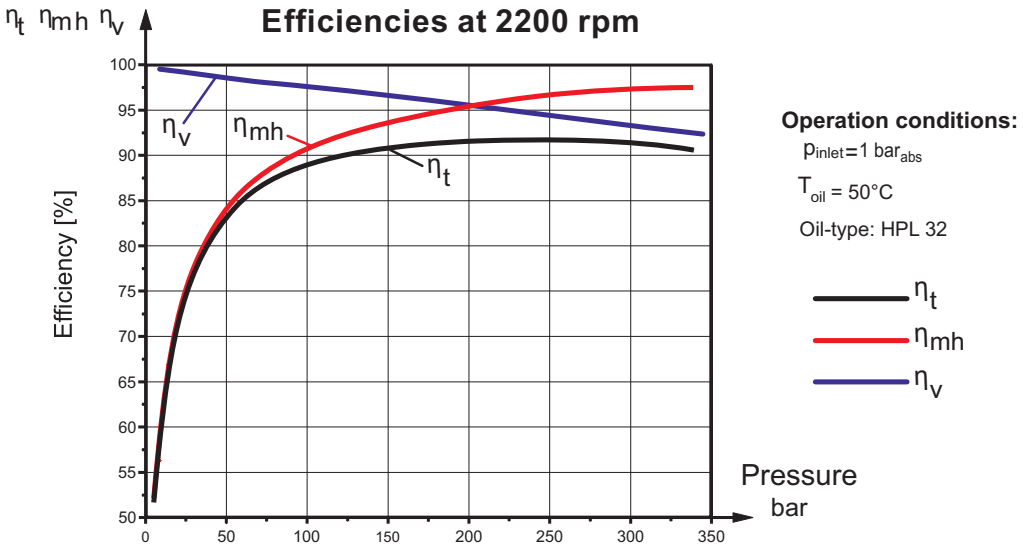

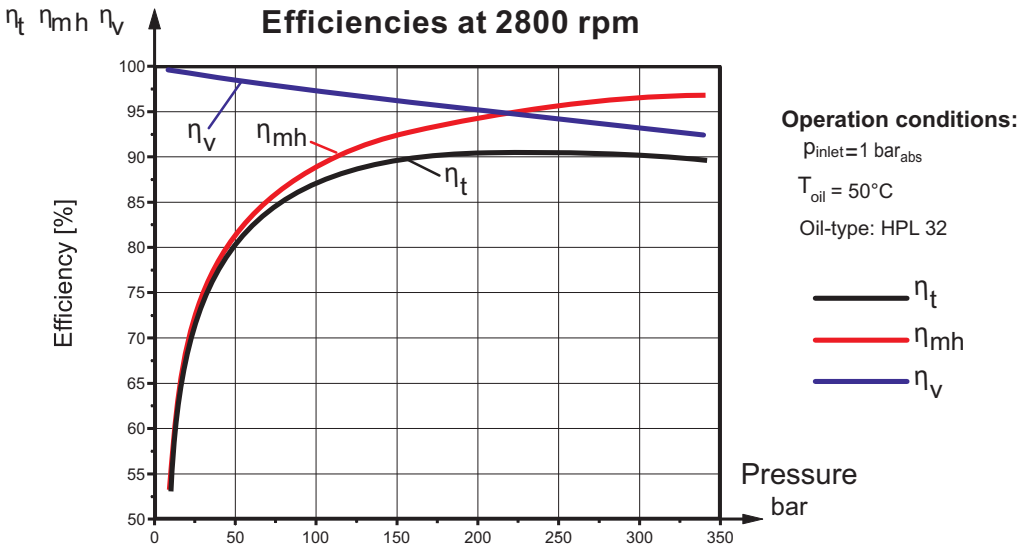

The pump size, pressure, torque, speed of rotation and flow rate required for a specific application can be calculated using the formulas on page 19.

Efficiencies for a particular pump may vary from the shown in the diagram depending on the operating conditions.

Overall Dimensions and Ports

Direction of Rotation **CW**(Right)

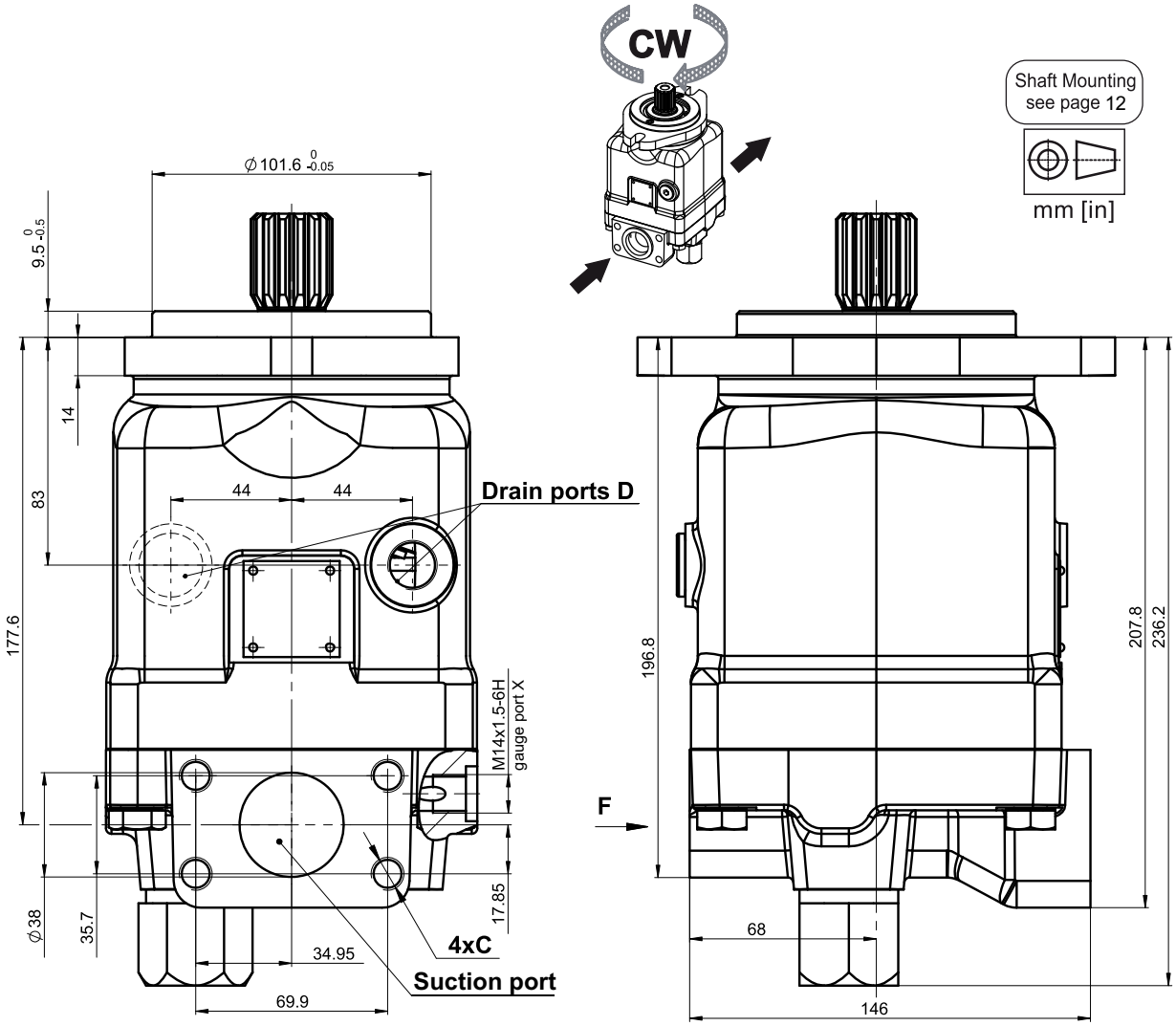

	Port Size
	default
Inlet	ISO 6162-1 DN38
Outlet	ISO 6162-2 DN19
D	M18x1,5
C	4xM12-6H
E	4xM10-6H

Overall Dimensions and Ports

Direction of Rotation **CCW**(Left)

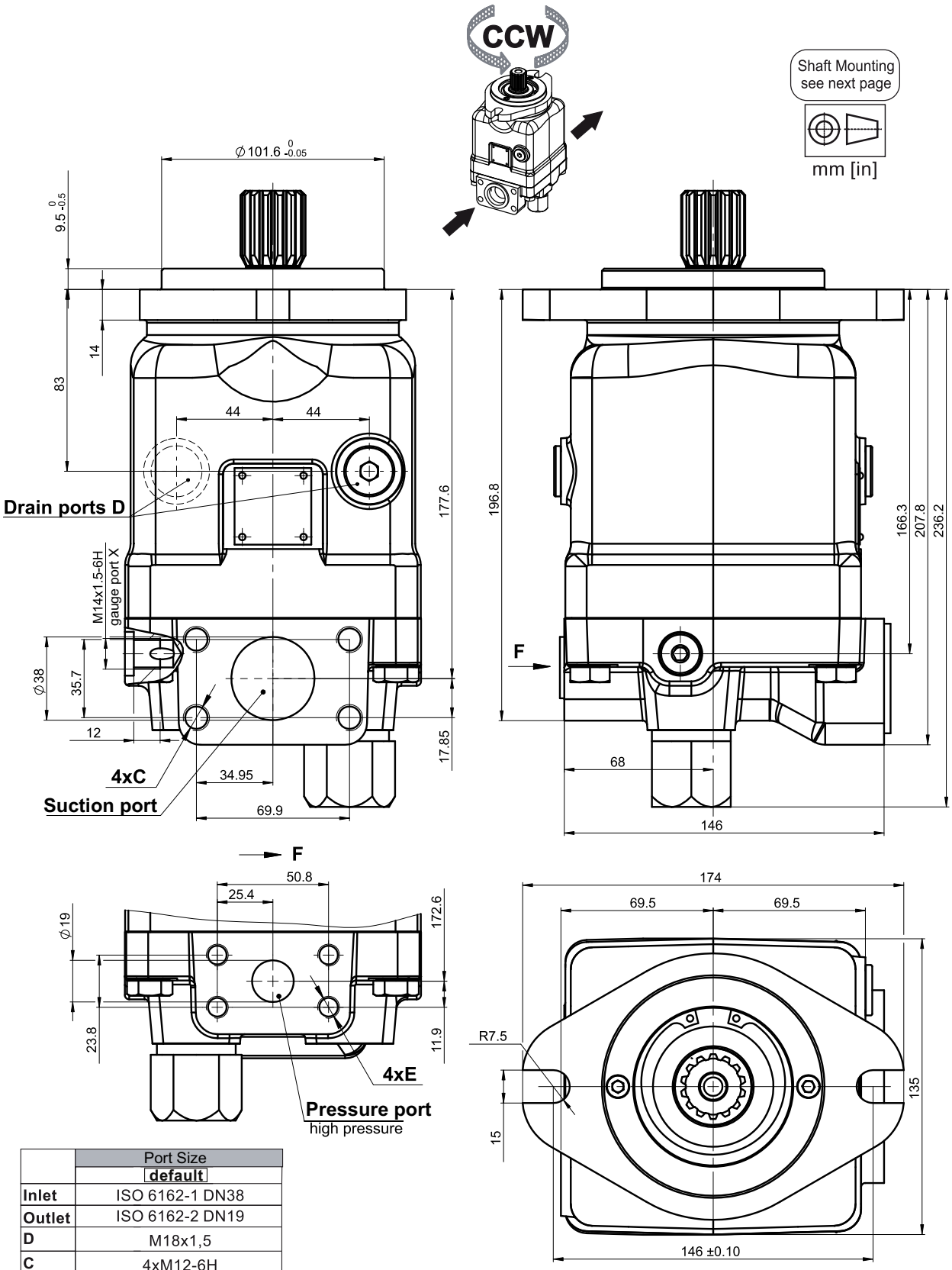

	Port Size
	default
Inlet	ISO 6162-1 DN38
Outlet	ISO 6162-2 DN19
D	M18x1,5
C	4xM12-6H
E	4xM10-6H

Shafts Mounting

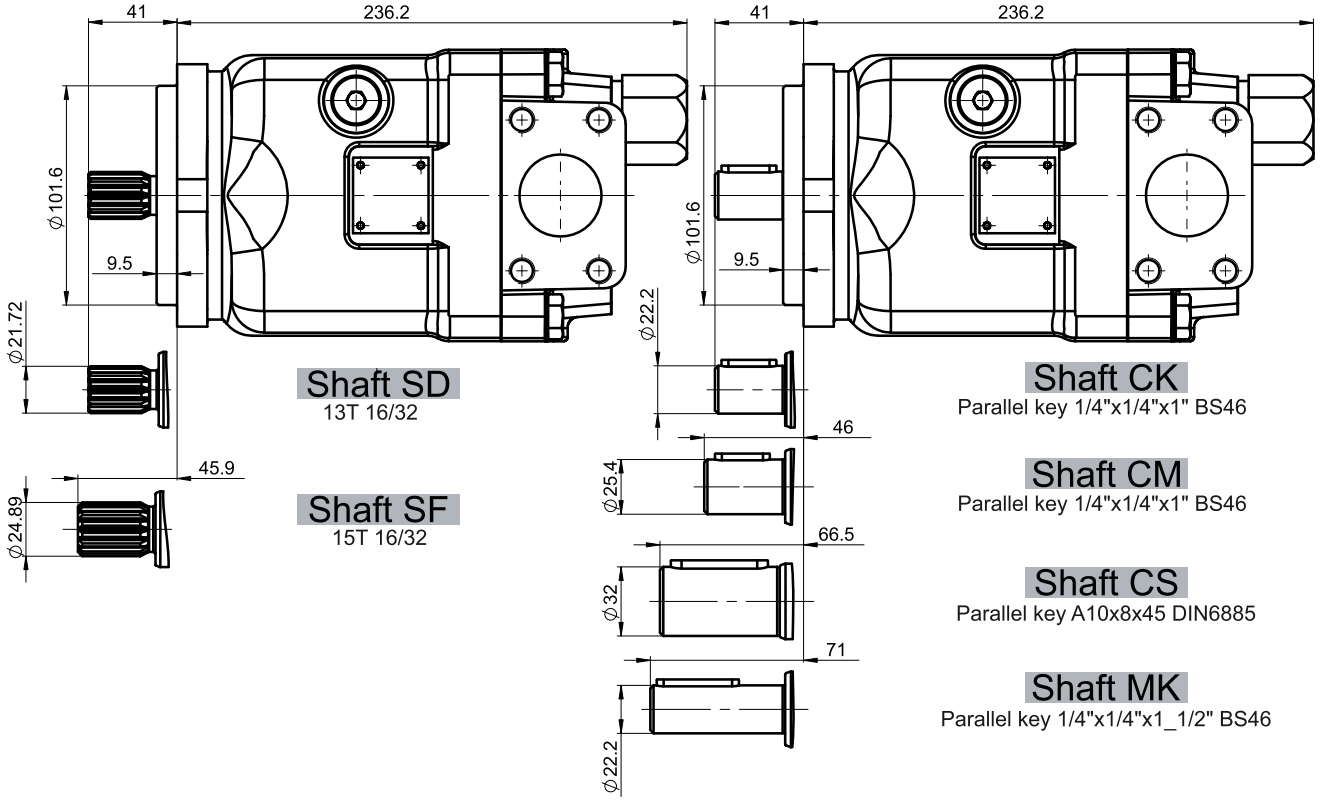

Shaft Dimensions
See Page 13

PERMISSIBLE SHAFT LOAD

Permissible shaft load		
max Axial	N	Fa=2000 [450]
max Radial	N	Fr=3600 [810]

The calculated max values are based on the optimal direction of the forces Fr, Fa and optimal position of the shaft (see page 15).

mm

Shaft Types and Dimensions

SD

ø21.72 M8-6H thread
13T 16/32 DP splined ANSI B92.1-1970
Max. torque 220 Nm

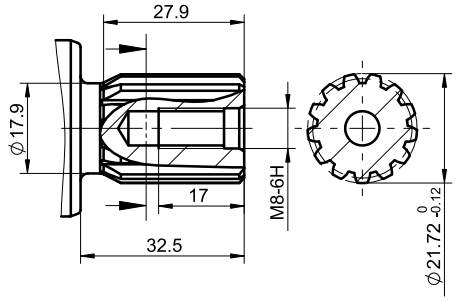

SF

ø24.89 M8-6H thread
15T 16/32 DP splined ANSI B92.1-1970
Max. torque 360 Nm

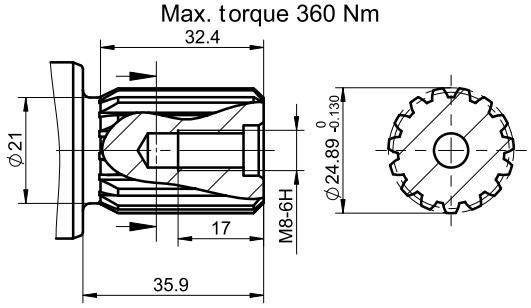

CK

ø22.2 straight, M8-6H thread
Parallel key **1/4"x1/4"x1**" BS46
Max. torque 180 Nm

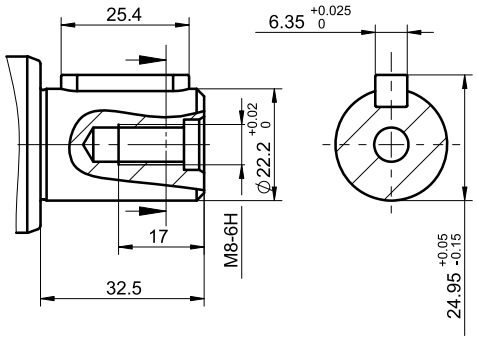

CM

ø25.4 straight, M8-6H thread
Parallel key **1/4"x1/4"x1**" BS46
Max. torque 250 Nm

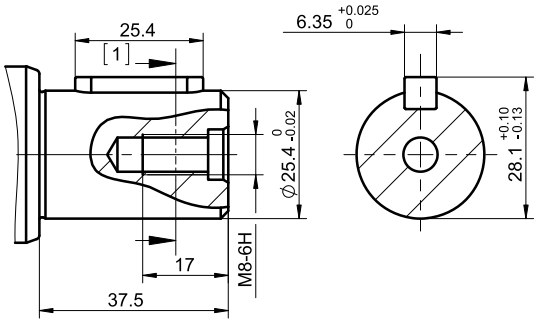

CS

ø32 straight, M8-6H thread
Parallel key **A10x8x45** DIN6885
Max. torque 565 Nm

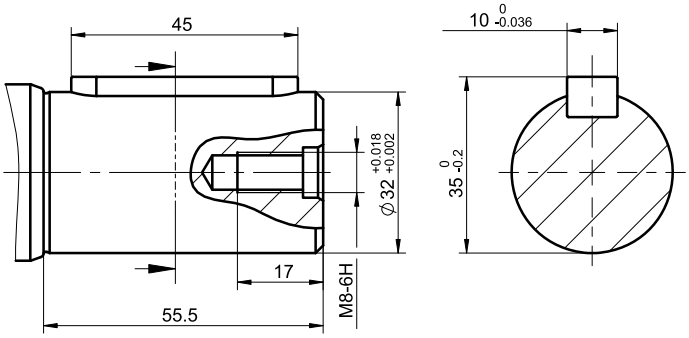

MK

ø22.2 straight, M8-6H thread
Parallel key **1/4"x1/4"x1_1/2**" BS46
Max. torque 180 Nm

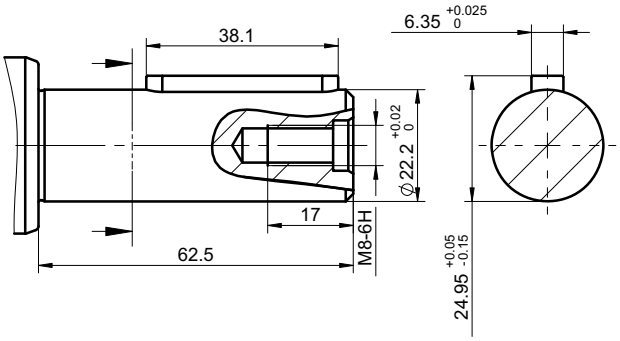

The required max. torque must not be exceeded

mm

ORDERING CODE

	1	2	3	4	5	6
T P F						

Pos.1 - Mounting Flange

B - SAE B - 2-Bolt flange
spigot diam. 101,6 mm - BC 146 mm

Pos.2 - Displacement Code

35 - 36.16 cm.^{3}/rev.
40 - 41.59 cm.^{3}/rev.
46 - 47.13 cm.^{3}/rev.
50 - 49.94 cm.^{3}/rev.

Pos.3 - Direction of Rotation

R - CW, Right direction
L - CCW, Left direction

Pos.4 - Shaft Extensions*

SD - ø21,72 spline SAE 13T 16/32 DP, M8

SF - ø24,9 spline SAE 15T 16/32, M8-6H

CK - ø22.2 straight, M8-6H thread
Parallel key 1/4"x1/4"x1" BS46

MK - ø22.2 straight, M8-6H thread
Parallel key 1/4"x1/4"x1_1/2" BS46

CM - ø25.4 straight, M8-6H thread
Parallel key 1/4"x1/4"x1" BS46

CS - ø32 straight, M8-6H thread
Parallel key A10x8x45 DIN6885

* The permissible output torque for shafts must not be exceeded!

We remain open to meet your special requirements upon request.

Pos.5 - Port Size

omit - Inlet ISO 6162-1 DN38, Outlet ISO 6162-2 DN19, metric thread, drain ports M18x1.5

Pos.6 - Seal, Corrosion Resistant Seal Surface

omit - NBR seal type material
V - FKM seal type material

INSTALLATION

DIRECTION OF ROTATION

Standard Rotation
Viewed from shaft end
Port **A** Pressurized - **CW**
Port **B** Pressurized - **CCW**

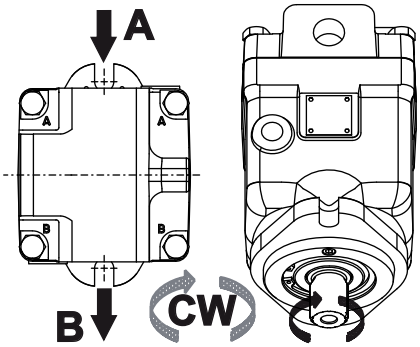

Reverse Rotation
Viewed from shaft end
Port **A** Pressurized - **CCW**
Port **B** Pressurized - **CW**

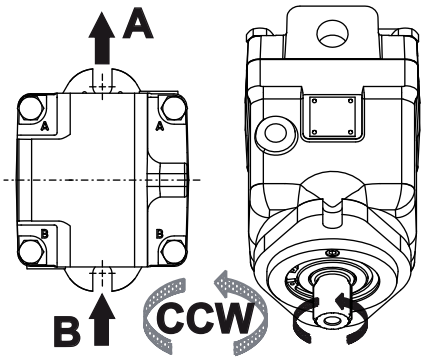

BEST POSITION FOR APPLYING RADIAL LOAD

Optimal position for applying radial load depending on the direction of rotation

Standard Rotation

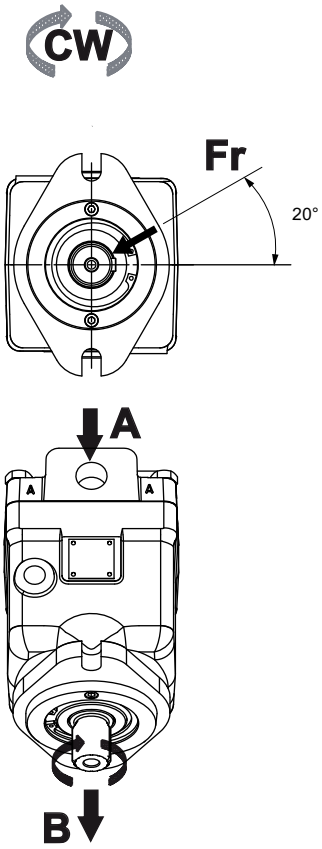

Reverse Rotation

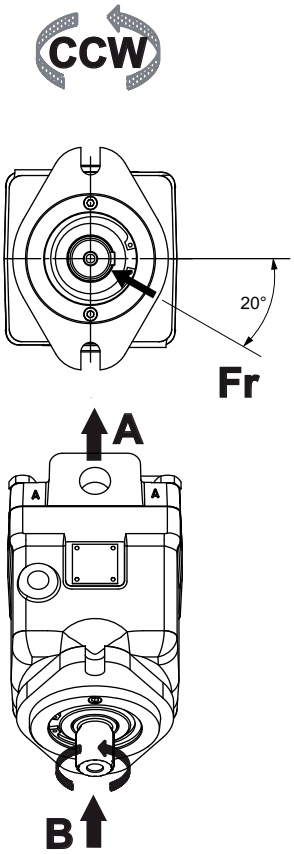

INSTALLATION

At start-up and during operation the pump housing has to be filled up with hydraulic fluid. Start-up has to be carried out at low or moderate speed and without load (for example 1000 rpm and pressure 50 bar [725 PSI]) till the pump and the hydraulic scheme are filled up with oil. Typically the start-up needs 10-15 minutes to finish. The leakage oil in the housing has to be discharged to the tank through the highest positioned drain port D. The max. pressure in the drain line is 5 bar.

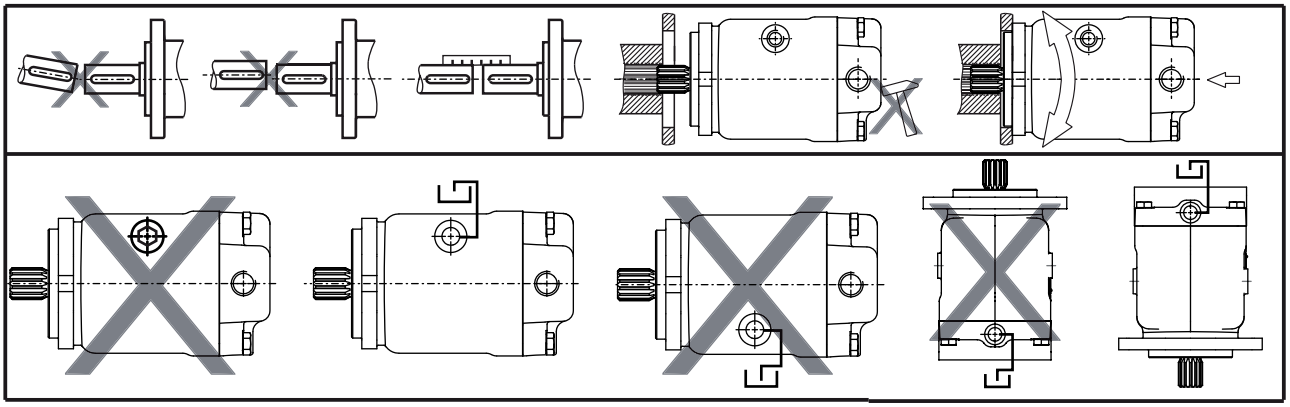

Installation below tank level (recommended)

- Fill up the axial piston pump before the start-up through the highest positioned drain port D.
- Operate the pump at low speed till the pump system is completely filled up.
- The minimum immersion depth of the drain line in the tank is 200 mm relative to the minimum oil level in the tank.

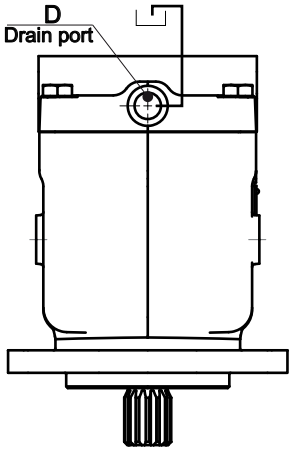

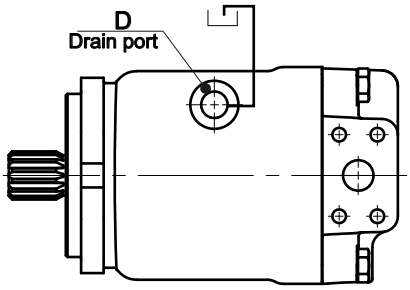

Installation on top of tank level

- Fill up the axial piston pump before the start-up through the highest positioned drain port D.
- Operate the pump at low speed till the pump system is completely filled up.
- The minimum immersion depth of the drain line in the tank is 200 mm relative to the minimum oil level in the tank.

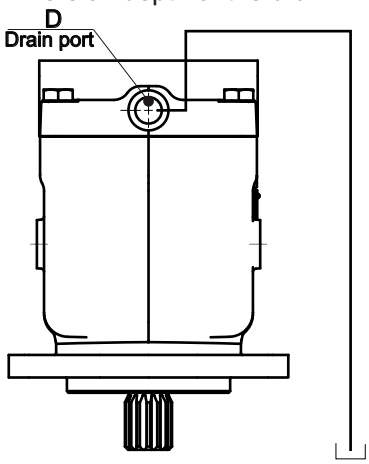

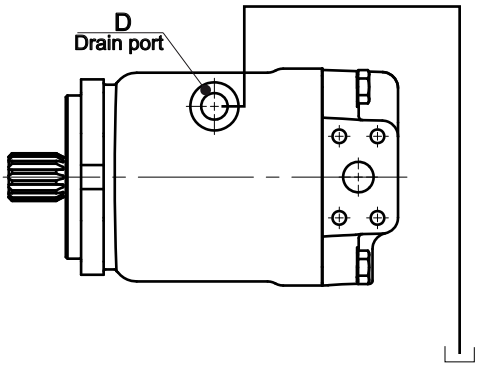

INSTALLATION

Recommended max. tightening torque X for metal plugs and orifice

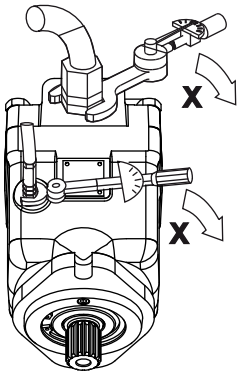

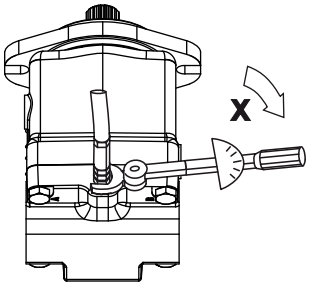

Screwed connection	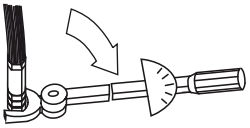 Max. Tightening Torque X, Nm 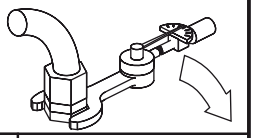			
	With copper washer	With aluminium washer	With cutting edge	With “O” ring
G 1/4	20	30	40	20
G 3/8	20	50	60	20
G 1/2	30	80	100	30
G 3/4	50	130	160	50
G 1	80	200	250	80
M 8	20	10	20	
M 10	20	10	20	
M 12	20	30	40	
M 14x1,5	20	30	40	30
M 16x1,5	20	50	60	50
M 18x1,5	20	50	60	50
M 20x1,5	30	80	100	80
M 22x1,5	30	80	100	80
M 24x1,5	20	30	40	100
M 27x2	50	130	100	100

Fluid Viscosity Limits

In order to obtain optimum efficiency and service life, we recommend to select the operating viscosity (at operating temperature) within the range shown on diagram below.

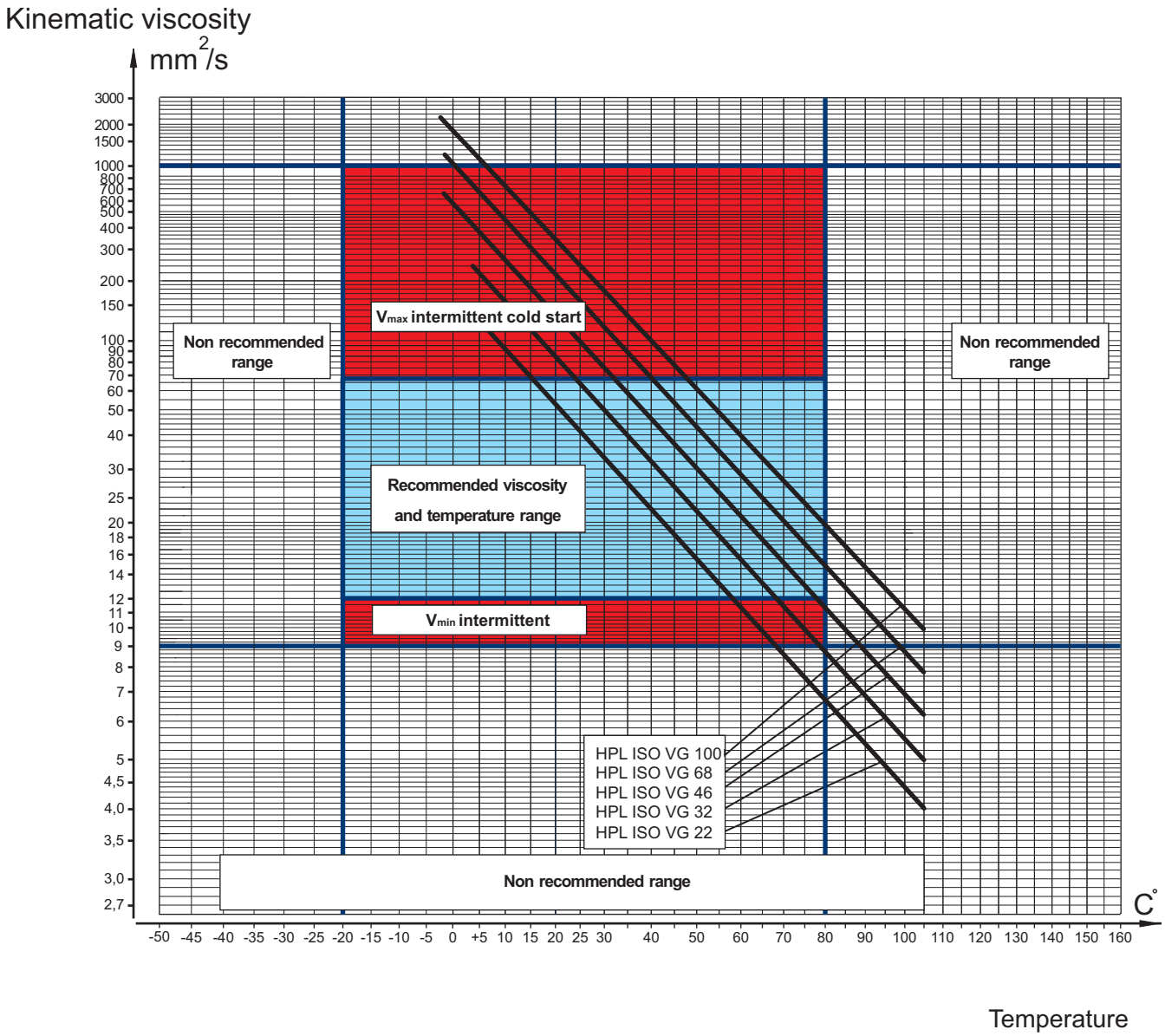

The above - shown viscosity characteristics are for reference only. Please, check the actual viscosity with the manufacturer of the fluid.

Basic Formulas

The motor(pump) size, pressure and flow required for a specific application can be calculated using the formulas below.

Metric System

Efficiency	$\eta_t = \eta_{mh} \cdot \eta_v \quad \eta_{mh} = \frac{\eta_t}{\eta_v} \quad \eta_v = \frac{\eta_t}{\eta_{mh}}$	
Input flow (for Motor)	$Q = \frac{Vg \cdot n}{1000 \cdot \eta_v}$	[l/min]
Output torque (for Motor)	$M = \frac{Vg \cdot \Delta p \cdot \eta_{mh}}{62.8}$	[Nm]
Output power (for Motor)	$P = \frac{M \cdot n}{9550} = \frac{Q \cdot \Delta p \cdot \eta_t}{60}$	[kW]
Speed (for Motor)	$n = \frac{Q \cdot 1000 \cdot \eta_v}{Vg}$	[min^{-1}]
Output flow (for pump)	$Q = \frac{Vg \cdot n \cdot \eta_v}{1000}$	[l/min]
Driving torque (for pump)	$M = \frac{Vg \cdot \Delta p}{62.8 \cdot \eta_{mh}}$	[Nm]
Input power (for pump)	$P = \frac{M \cdot n}{9550} = \frac{Q \cdot \Delta p}{60 \cdot \eta_t}$	[kW]

Vg =	Displacement per rev.	[cm^3]
Δp =	$p_{HP} - p_{LP}$	[bar]
p_{HP} =	High pressure	[bar]
p_{LP} =	Low pressure	[bar]
η_v =	Volumetric efficiency	
η_{mh} =	Mechanical-hydraulic efficiency	
η_t =	Overall efficiency	

Application Formulas

Motor speed: n

$$n = \frac{2{,}65 \cdot v_{km} \cdot i}{R_m} \qquad n = \frac{168 \cdot v_{ml} \cdot i}{R_{in}}$$

v_{km} - vehicle speed [km/h]
v_{ml} - vehicle speed [mil/h]
R_m - wheel rolling radius [m]
R_{in} - wheel rolling radius [in]
i - gear ratio between motor and wheels.
If no gearbox, use i=1.

Radial motor loading: P_{rad}, N

When the motor is used for motion with a ring or gear mounted directly on the motor shaft, the total radial load of the motor shaft **P_{rad}** is the sum of the motion force and the weight force acting on ring.

G_W - Weight held by the shaft
P_{rad} - Total radial load of the motor shaft
M/R - Motion force

$$P_{rad} = \sqrt{G_W^2 + \left(\frac{M}{R}\right)^2}$$

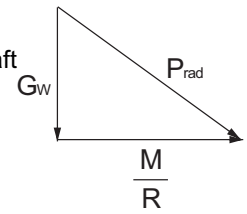

Total tractive effort: TE, N

Total tractive effort **TE** is the total effort necessary for vehicle motion i.e. the sum of the calculated forces increased by 10 % because of air resistance.

$$TE = 1{,}1 \cdot (RR + GR + FA + DP)$$

RR - force required to overcome the rolling resistance
GR - force required to slope upwards
FA - force required to accelerate (acceleration force)
DP - additional tractive effort (trailer)

Motor Torque moment: M, Nm

Necessary torque for the hydraulic motor:

$$M = \frac{TE \cdot R_m [R_{in}]}{N \cdot I \cdot \eta_M}$$

I – motor numbers
η_M - mechanical gearbox efficiency (if it is available)

Depending on the results of the load calculations, the most appropriate type of motor from the catalogue is selected.

As HANSA-TMP has a very extensive range of products and some products have a variety of applications, the information supplied may often only apply to specific situations.

If the catalogue does not supply all the information required, please contact HANSA-TMP.
In order to provide a comprehensive reply to queries we may require specific data regarding the proposed application.

Whilst every reasonable endeavour has been made to ensure accuracy, this publication cannot be considered to represent part of any contract, whether expressed or implied.

The data is this catalogue refer to the standard product. The policy of HANSA-TMP consists of a continuous improvement of its products. It reserves the right to change the specifications of the different products whenever necessary and without giving prior information.

HANSA · TMP srl

HYDRAULIC COMPONENTS
HYDROSTATIC TRANSMISSIONS
GEARBOXES - ACCESSORIES

Via M. L. King, 6 - **41122 MODENA (ITALY)**
Tel: +39 059 415 711
Fax: +39 059 415 729 / 059 415 730
INTERNET: http://www.hansatmp.it
E-MAIL: hansatmp@hansatmp.it